TOP VIEW

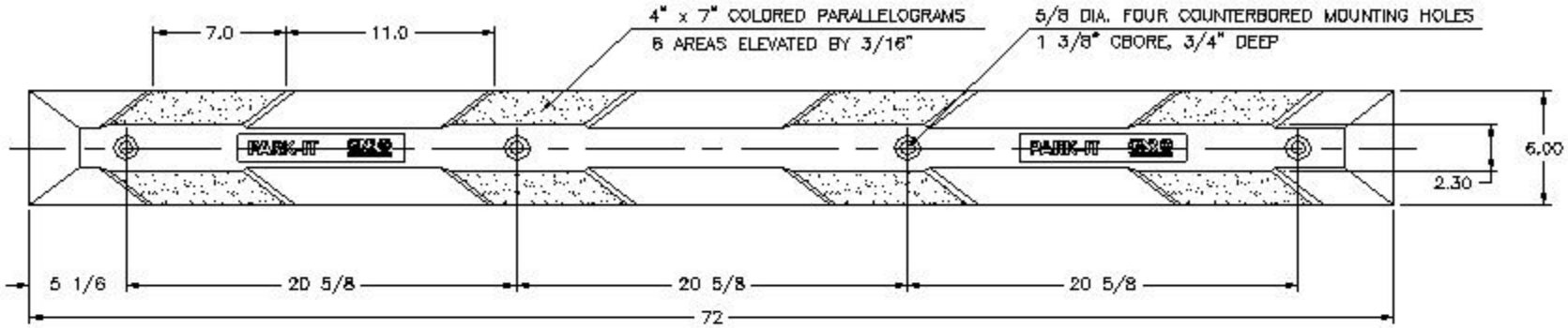

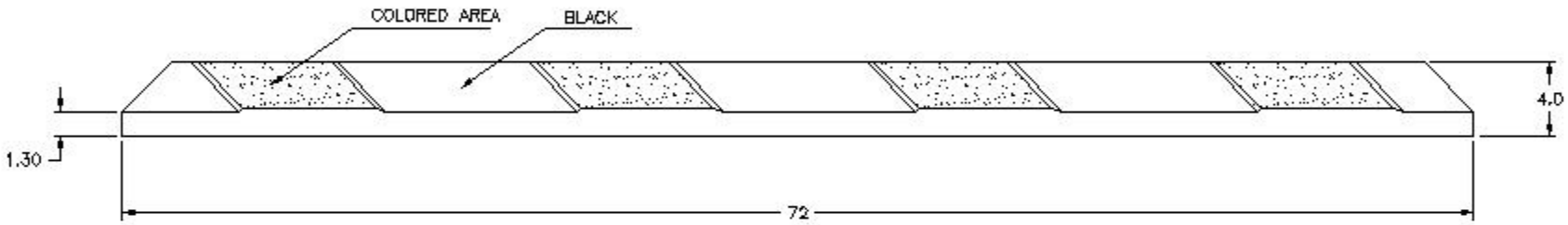

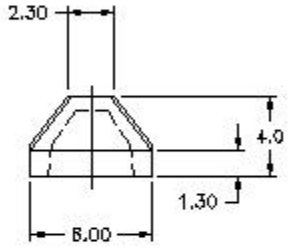

BOTTOM VIEW

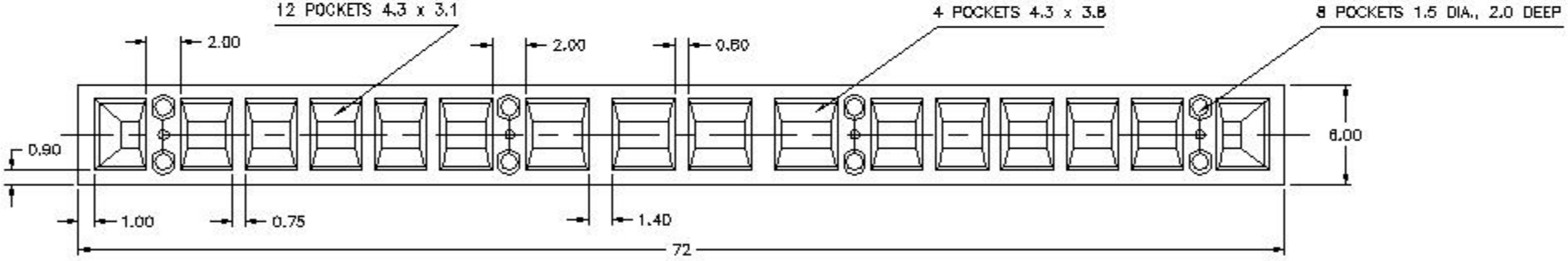

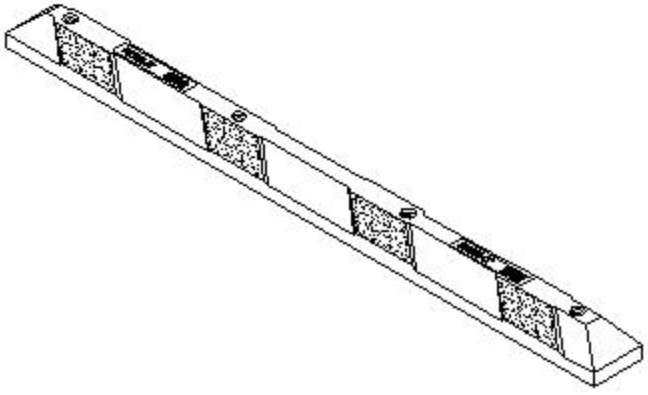

PRODUCT SPECIFICATIONS:

1. MATERIAL: COMPRESSION MOLDED RECYCLED RUBBER COMPOSITE
2. NOMINAL DIMENSIONS: 72"L x 6"W x 4"H
3. NOMINAL WEIGHT OF THE PRODUCT: 34 lbs.
4. COLOR: BLACK WITH REFLECTIVE YELLOW, BLUE OR WHITE TAPE

UNLESS OTHERWISE SPECIFIED : DIMENSIONS ARE IN INCHES TOLERANCES DECIMALS .x ± 1/8" .xx ± 1/16" ANGULAR ±.05°		**QNR TECHNOLOGIES INC.**		
		RUBBER PARKING CURB *6 FT. MODEL*		
DRAWN S. JONASZ	DATE JUL. 26/99			
CHECKED	DATE	SCALE 1=5	DWG NO - 34PC02-3	SIZE C
DESIGN S. JONASZ	DATE JUL. 26/99	MATERIAL	SHEET	

THIS DRAWING IS THE PROPERTY OF QNR TECHNOLOGIES INC. AND MAY NOT BE DUPLICATED, PURCHASED, DISCLOSED TO OTHERS NOR USED FOR MANUFACTURING PURPOSES WITHOUT WRITTEN PERMISSION FROM QNR TECHNOLOGIES INC.